KLIMAS Sp. z o.o. ul. W. Witosa 135/137
Kuźnica Kiedrzyńska 42-233 Mykanów
tel. +48 34 377 71 00, fax. +48 34 328 01 73 Hotline: 801 477 477, www.wkret-met.com

PRODUCT DATA SHEET – WS-4,2

Section 1. PRODUCT DESCRIPTION

SELF-DRILLING SCREW FOR FIXING STEEL SHEETS IN STEEL CONSTRUCTION – WS-4,2

Self-drilling screw WS-4,2 is made of heat-treated carbon steel in galvanized zinc coating 12 µm (WS) or SQ Ceramic coating (WS-D). Screw has SW hex head, pin threaded for use in steel and self-drilling tip.

Use:

- **fixing steel sheets in steel constructions**
- **flashings**
- **making lap joints in steel sheets**

Self-drilling screws hold European Technical Assessment: ETA-16/0443

Section 2. METHOD OF INSTALLATION

1. Original self-drilling screws delivered by the manufacturer can be used only
2. Before installation identify the substrate, its thickness and environmental conditions (expressed as corrosivity categories), and then select screws which meet the above criteria
3. Correctly select screw type, its length, drilling capacity depending on sum of thickness values of members being fixed
4. Drilling capacity for each screw is given in corresponding Product Data Sheet and European Technical Assessment and stands for the sum of thickness values of members being fixed
5. Make sure to set optimum rotary speed when screwing (max. 2500 rpm), as too high rotary speed may cause burning of drilling bits and make it impossible to fasten the screw
6. At all times screws should be installed perpendicularly to the substrate surface

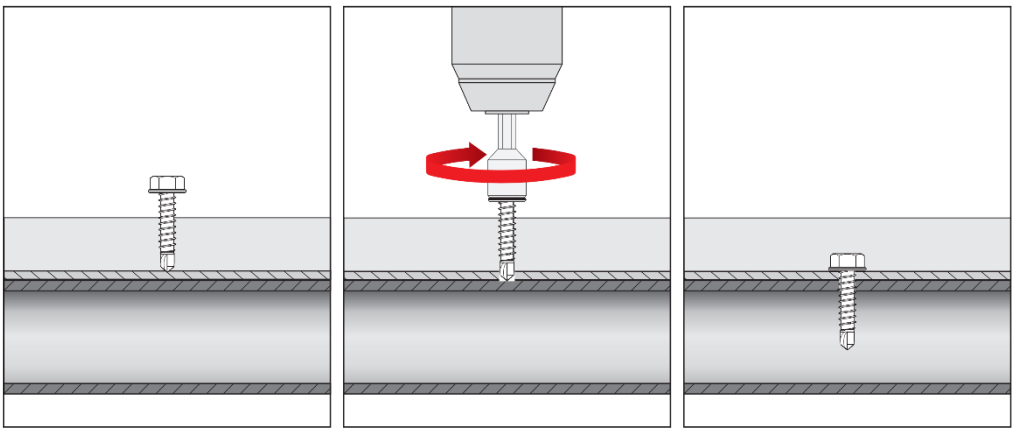

Section 3. TECHNICAL DATA

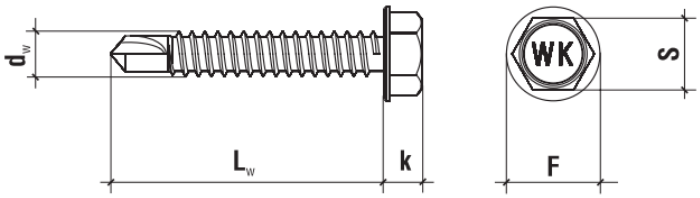

All rights reserved The sheet may be disclosed only in the form as delivered. No part (contents such as text, graphics, logos, figures, pictures, and any other data) given in this document may be modified or published whatsoever in part, without prior authorisation. Any trademarks, graphic symbols, trade names, logos and other data are protected by copyright and are property of their owner. Created: 2016-08-19 Updated: 2022-06-24

TECHNICAL PARAMETERS		
Parameter	Unit	Value
Screw diameter	d_w [mm]	4,2
Drilling capacity	Σt_i [mm]	≤ 2
Wrench size	S [mm]	SW-7
Head height	k [mm]	4,5
Head diameter	F [mm]	8,6
Tip length	[mm]	7,0
Screw material	-	carbon steel
Corrosion protection	WS	galvanized zinc coating 12 µm
	WS-D	SQ Ceramic coating
EPDM washer	D [mm]	-
Coating to RAL palette	-	-
Substrate material	-	steel ≥ S280GD
European Technical Assessment	-	ETA-16/0443

INSTALLATION PARAMETERS		
Parameter	Unit	Value
Screw diameter	d_w [mm]	4,2
Diameter of hole in the substrate	d_0 [mm]	-
Min. depth of hole in the substrate	h_0 [mm]	-
Anchorage depth	h_{eff} [mm]	push-through
Min. substrate thickness	h_{min} [mm]	0,50
Min. spacing	s_{min} [mm]	50
Min. distance from edge	c_{min} [mm]	25

RESISTANCE					
Characteristic pull-out / shear strength [kN]					
Substrate thickness [mm]	Steel sheet thickness [mm]				
	0,50	0,63	0,75	0,88	1,00
0,50	0,43/0,92	0,43/0,92	0,43/0,92	0,43/0,92	0,43/0,92
0,63	0,43/0,92	0,57/1,11	0,57/1,11	0,57/1,11	0,57/1,11
0,75	0,43/0,92	0,57/1,11	0,69/1,66	0,69/1,66	0,69/1,66
0,88	0,43/0,92	0,57/1,11	0,69/1,66	0,73/1,84	0,73/1,84
1,00	0,43/0,92	0,57/1,11	0,69/1,66	0,73/1,84	0,78/1,88

*Partial safety factor of 1.33 recommended

SELECTION TABLE				
WS (galvanized zinc coating ZN)	WS-D* (SQ Ceramic coating)	Screw dimensions	Max. usable length	Number of pieces in a box
		d_w x L_w [mm]	t_{fix} [mm]	[pcs]
WS-42016	WS-D-42016	4,2 x 16	1	500
WS-42019	WS-D-42019	4,2 x 19	7	500
WS-42025	WS-D-42025	4,2 x 25	14	500

*Screw on request and to order

Section 4. REMARKS

1. All previous versions of this Product Data Sheet shall cease to be valid
2. Data given in this Product Data Sheet is in accordance with current knowledge and published in good faith. KLIMAS Sp. z o.o. is not responsible for correctness and quality of the fixing if recommendations regarding method of use and installation are not followed.

All rights reserved The sheet may be disclosed only in the form as delivered. No part (contents such as text, graphics, logos, figures, pictures, and any other data) given in this document may be modified or published whatsoever in part, without prior authorisation. Any trademarks, graphic symbols, trade names, logos and other data are protected by copyright and are property of their owner. Created: 2016-08-19 Updated: 2022-06-24

KLIMAS Sp. z o.o. ul. W. Witosa 135/137
Kuźnica Kiedrzyńska 42-233 Mykanów
tel. +48 34 377 71 00, fax. +48 34 328 01 73 Hotline: 801 477 477, www.wkret-met.com

PRODUCT DATA SHEET – WS-4,8

Section 1. PRODUCT DESCRIPTION

SELF-DRILLING SCREW FOR FIXING STEEL SHEETS IN STEEL CONSTRUCTION – WS-4,8

Self-drilling screw WS-4,8 is made of heat-treated carbon steel in galvanized zinc coating 12 µm (WS) or SQ Ceramic coating (WS-D). Screw has SW hex head, pin threaded for use in steel and self-drilling tip.

Use:

- **fixing steel sheets in steel constructions**
- **flashings**
- **making lap joints in steel sheets**

Self-drilling screws hold European Technical Assessment: ETA-16/0443

Section 2. METHOD OF INSTALLATION

1. Original self-drilling screws delivered by the manufacturer can be used only
2. Before installation identify the substrate, its thickness and environmental conditions (expressed as corrosivity categories), and then select screws which meet the above criteria
3. Correctly select screw type, its length, drilling capacity depending on sum of thickness values of members being fixed
4. Drilling capacity for each screw is given in corresponding Product Data Sheet and European Technical Assessment and stands for the sum of thickness values of members being fixed
5. Make sure to set optimum rotary speed when screwing (max. 2500 rpm), as too high rotary speed may cause burning of drilling bits and make it impossible to fasten the screw
6. At all times screws should be installed perpendicularly to the substrate surface

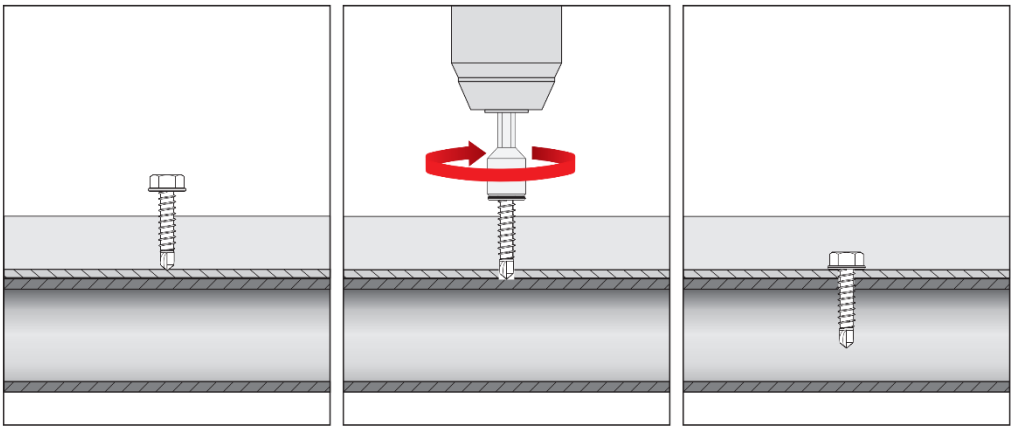

Section 3. TECHNICAL DATA

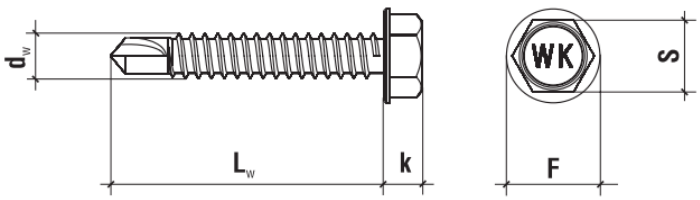

All rights reserved The sheet may be disclosed only in the form as delivered. No part (contents such as text, graphics, logos, figures, pictures, and any other data) given in this document may be modified or published whatsoever in part, without prior authorisation. Any trademarks, graphic symbols, trade names, logos and other data are protected by copyright and are property of their owner. Created: 2016-08-19 Updated: 2022-06-24

TECHNICAL PARAMETERS		
Parameter	Unit	Value
Screw diameter	d_w [mm]	4,8
Drilling capacity	Σt_i [mm]	≤ 3
Wrench size	S [mm]	SW-8
Head height	k [mm]	4,5
Head diameter	F [mm]	10,0
Tip length	[mm]	8,0
Screw material	-	carbon steel
Corrosion protection	WS	galvanized zinc coating 12 µm
	WS-D	SQ Ceramic coating
EPDM washer	D [mm]	-
Coating to RAL palette	-	-
Substrate material	-	steel ≥ S280GD
European Technical Assessment	-	ETA-16/0443

INSTALLATION PARAMETERS		
Parameter	Unit	Value
Screw diameter	d_w [mm]	4,8
Diameter of hole in the substrate	d_0 [mm]	-
Min. depth of hole in the substrate	h_0 [mm]	-
Anchorage depth	h_{eff} [mm]	push-through
Min. substrate thickness	h_{min} [mm]	0,75
Min. spacing	s_{min} [mm]	50
Min. distance from edge	c_{min} [mm]	25

RESISTANCE							
Characteristic pull-out / shear strength [kN]							
Substrate thickness [mm]	Steel sheet thickness [mm]						
	0,50	0,63	0,75	0,88	1,00	1,25	1,50
0,75	0,63/1,32	0,78/1,59	0,78/2,38	0,78/2,38	0,78/2,38	0,78/2,38	0,78/2,38
0,88	0,63/1,32	0,89/1,59	0,97/2,38	0,97/3,02	0,97/3,02	0,97/3,02	0,97/3,02
1,00	0,63/1,32	0,89/1,59	1,01/2,38	1,07/3,02	1,16/3,03	1,16/3,03	1,16/3,03
1,25	0,63/1,32	0,89/1,59	1,01/2,38	1,07/3,02	1,16/3,03	1,16/3,10	1,16/3,10
1,50	0,63/1,32	0,89/1,59	1,01/2,38	1,07/3,02	1,16/3,03	1,16/3,10	1,16/3,15

*Partial safety factor of 1.33 recommended

SELECTION TABLE				
WS (galvanized zinc coating ZN)	WS-D* (SQ Ceramic coating)	Screw dimensions	Max. usable length	Number of pieces in a box
		d_w x L_w [mm]	t_{fix} [mm]	[pcs]
WS-48016	WS-D-48016	4,8 x 16	5	500
WS-48019	WS-D-48019	4,8 x 19	9	500
WS-48025	WS-D-48025	4,8 x 25	14	500
WS-48032	WS-D-48032	4,8 x 32	21	500

*Screw on request and to order

Section 4. REMARKS

1. All previous versions of this Product Data Sheet shall cease to be valid
2. Data given in this Product Data Sheet is in accordance with current knowledge and published in good faith. KLIMAS Sp. z o.o. is not responsible for correctness and quality of the fixing if recommendations regarding method of use and installation are not followed.

All rights reserved The sheet may be disclosed only in the form as delivered. No part (contents such as text, graphics, logos, figures, pictures, and any other data) given in this document may be modified or published whatsoever in part, without prior authorisation. Any trademarks, graphic symbols, trade names, logos and other data are protected by copyright and are property of their owner. Created: 2016-08-19 Updated: 2022-06-24

KLIMAS Sp. z o.o. ul. W. Witosa 135/137
Kuźnica Kiedrzyńska 42-233 Mykanów
tel. +48 34 377 71 00, fax. +48 34 328 01 73 Hotline: 801 477 477, www.wkret-met.com

PRODUCT DATA SHEET – WS-5,5

Section 1. PRODUCT DESCRIPTION

SELF-DRILLING SCREW FOR FIXING STEEL SHEETS IN STEEL CONSTRUCTION – WS-5,5

Self-drilling screw WS-5,5 is made of heat-treated carbon steel in galvanized zinc coating 12 µm (WS) or SQ Ceramic coating (WS-D). Screw has SW hex head, pin threaded for use in steel and self-drilling tip.

Use:

- **fixing steel sheets in steel constructions**
- **for mounting profiled sheets to steel structures**
- **for mounting wall cassettes to steel structures**

Self-drilling screws hold European Technical Assessment: ETA-16/0443

Section 2. METHOD OF INSTALLATION

1. Original self-drilling screws delivered by the manufacturer can be used only
2. Before installation identify the substrate, its thickness and environmental conditions (expressed as corrosivity categories), and then select screws which meet the above criteria
3. Correctly select screw type, its length, drilling capacity depending on sum of thickness values of members being fixed
4. Drilling capacity for each screw is given in corresponding Product Data Sheet and European Technical Assessment and stands for the sum of thickness values of members being fixed
5. Make sure to set optimum rotary speed when screwing (max. 1800 rpm), as too high rotary speed may cause burning of drilling bits and make it impossible to fasten the screw
6. At all times screws should be installed perpendicularly to the substrate surface

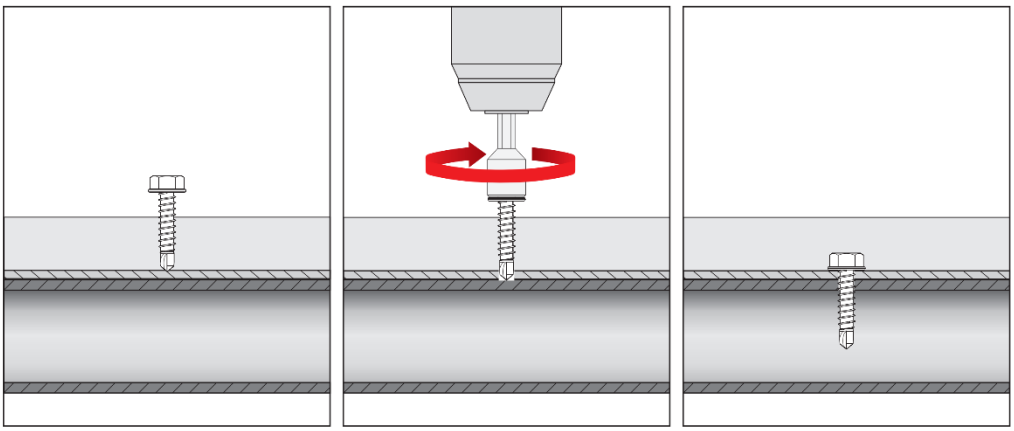

Section 3. TECHNICAL DATA

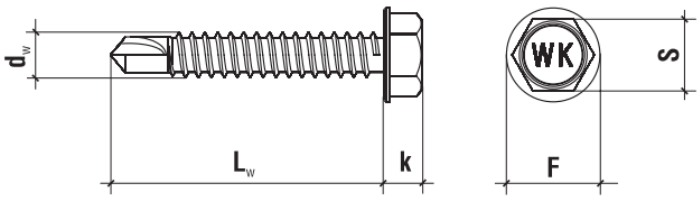

All rights reserved The sheet may be disclosed only in the form as delivered. No part (contents such as text, graphics, logos, figures, pictures, and any other data) given in this document may be modified or published whatsoever in part, without prior authorisation. Any trademarks, graphic symbols, trade names, logos and other data are protected by copyright and are property of their owner. Created: 2016-08-19 Updated: 2022-06-24

TECHNICAL PARAMETERS		
Parameter	Unit	Value
Screw diameter	d_w [mm]	5,5
Drilling capacity	Σt_i [mm]	≤ 5
Wrench size	S [mm]	SW-8
Head height	k [mm]	4,9
Head diameter	F [mm]	10,5
Tip length	[mm]	9,0
Screw material	-	carbon steel
Corrosion protection	WS	galvanized zinc coating 12 µm
	WS-D	SQ Ceramic coating
EPDM washer	D [mm]	-
Coating to RAL palette	-	-
Substrate material	-	steel ≥ S280GD
European Technical Assessment	-	ETA-16/0443

INSTALLATION PARAMETERS		
Parameter	Unit	Value
Screw diameter	d_w [mm]	5,5
Diameter of hole in the substrate	d_0 [mm]	-
Min. depth of hole in the substrate	h_0 [mm]	-
Anchorage depth	h_{eff} [mm]	push-through
Min. substrate thickness	h_{min} [mm]	1,0
Min. spacing	s_{min} [mm]	50
Min. distance from edge	c_{min} [mm]	25

RESISTANCE						
Characteristic pull-out / shear strength [kN]						
Substrate thickness [mm]	Steel sheet thickness [mm]					
	0,50	0,63	0,75	0,88	1,00	1,25 ÷ 2,00
1,00	0,63/1,53	0,89/1,88	1,01/2,52	1,07/2,87	1,10/2,90	1,10/4,09
1,25 ÷ 3,0	0,63/1,53	0,89/1,88	1,01/2,52	1,07/2,87	1,16/2,90	1,16/4,09

*Partial safety factor of 1.33 recommended

SELECTION TABLE				
WS (galvanized zinc coating ZN)	WS-D* (SQ Ceramic coating)	Screw dimensions	Max. usable length	Number of pieces in a box
		d_w x L_w [mm]	t_{fix} [mm]	[pcs]
WS-55019	WS-D-55019	5,5 x 19	4	500
WS-55025	WS-D-55025	5,5 x 25	10	500
WS-55032	WS-D-55032	5,5 x 32	17	500
WS-55038	WS-D-55038	5,5 x 38	23	250
WS-55045	WS-D-55045	5,5 x 45	30	250
WS-55050	WS-D-55050	5,5 x 50	35	250
WS-55060	WS-D-55060	5,5 x 60	45	250
WS-55075	WS-D-55075	5,5 x 75	60	200
WS-55090	WS-D-55090	5,5 x 90	75	100
WS-55120	WS-D-55120	5,5 x 120	105	100

*Screw on request and to order

Section 4. REMARKS

1. All previous versions of this Product Data Sheet shall cease to be valid
2. Data given in this Product Data Sheet is in accordance with current knowledge and published in good faith. KLIMAS Sp. z o.o. is not responsible for correctness and quality of the fixing if recommendations regarding method of use and installation are not followed.

All rights reserved The sheet may be disclosed only in the form as delivered. No part (contents such as text, graphics, logos, figures, pictures, and any other data) given in this document may be modified or published whatsoever in part, without prior authorisation. Any trademarks, graphic symbols, trade names, logos and other data are protected by copyright and are property of their owner. Created: 2016-08-19 Updated: 2022-06-24

KLIMAS Sp. z o.o. ul. W. Witosa 135/137
Kuźnica Kiedrzyńska 42-233 Mykanów
tel. +48 34 377 71 00, fax. +48 34 328 01 73 Hotline: 801 477 477, www.wkret-met.com

PRODUCT DATA SHEET – WS-6,3

Section 1. PRODUCT DESCRIPTION

SELF-DRILLING SCREW FOR FIXING STEEL SHEETS IN STEEL CONSTRUCTION – WS-6,3

Self-drilling screw WS-6,3 is made of heat-treated carbon steel in galvanized zinc coating 12 µm (WS) or SQ Ceramic coating (WS-D). Screw has SW hex head, pin threaded for use in steel and self-drilling tip.

Use:

- **fixing steel sheets in steel constructions**
- **for mounting profiled sheets to steel structures**
- **for mounting wall cassettes to steel structures**

Self-drilling screws hold European Technical Assessment: ETA-16/0443

Section 2. METHOD OF INSTALLATION

1. Original self-drilling screws delivered by the manufacturer can be used only
2. Before installation identify the substrate, its thickness and environmental conditions (expressed as corrosivity categories), and then select screws which meet the above criteria
3. Correctly select screw type, its length, drilling capacity depending on sum of thickness values of members being fixed
4. Drilling capacity for each screw is given in corresponding Product Data Sheet and European Technical Assessment and stands for the sum of thickness values of members being fixed
5. Make sure to set optimum rotary speed when screwing (max. 1800 rpm), as too high rotary speed may cause burning of drilling bits and make it impossible to fasten the screw
6. At all times screws should be installed perpendicularly to the substrate surface

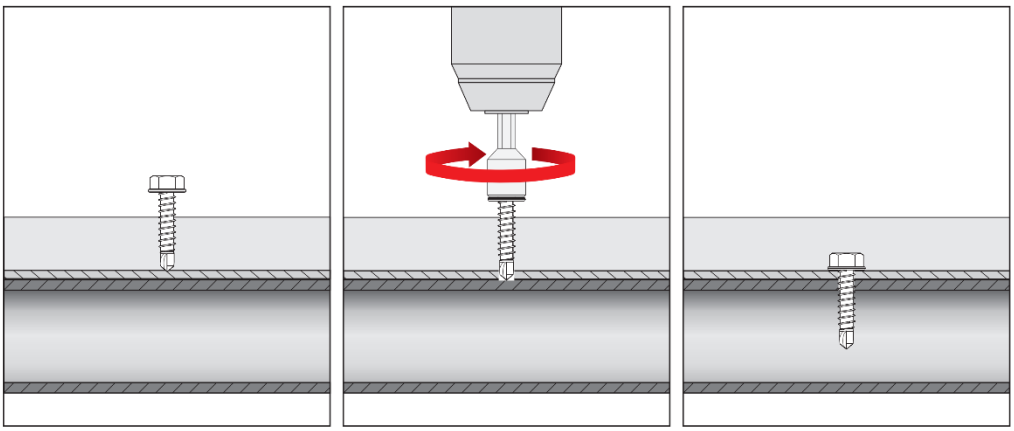

Section 3. TECHNICAL DATA

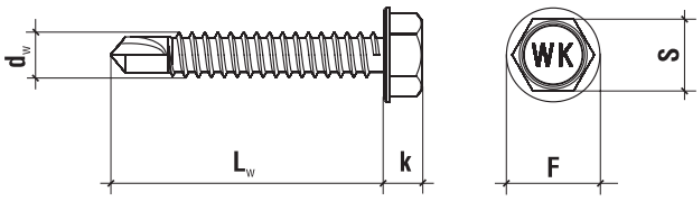

All rights reserved The sheet may be disclosed only in the form as delivered. No part (contents such as text, graphics, logos, figures, pictures, and any other data) given in this document may be modified or published whatsoever in part, without prior authorisation. Any trademarks, graphic symbols, trade names, logos and other data are protected by copyright and are property of their owner. Created: 2016-08-19 Updated: 2022-06-24

TECHNICAL PARAMETERS		
Parameter	Unit	Value
Screw diameter	d_w [mm]	6,3
Drilling capacity	Σt_i [mm]	≤ 7
Wrench size	S [mm]	SW-10
Head height	k [mm]	5,4
Head diameter	F [mm]	12,5
Tip length	[mm]	11,0
Screw material	-	carbon steel
Corrosion protection	WS	galvanized zinc coating 12 µm
	WS-D	SQ Ceramic coating
EPDM washer	D [mm]	-
Coating to RAL palette	-	-
Substrate material	-	steel ≥ S280GD
European Technical Assessment	-	ETA-16/0443

INSTALLATION PARAMETERS		
Parameter	Unit	Value
Screw diameter	d_w [mm]	6,3
Diameter of hole in the substrate	d_0 [mm]	-
Min. depth of hole in the substrate	h_0 [mm]	-
Anchorage depth	h_{eff} [mm]	push-through
Min. substrate thickness	h_{min} [mm]	3,0
Min. spacing	s_{min} [mm]	50
Min. distance from edge	c_{min} [mm]	25

RESISTANCE						
Characteristic pull-out / shear strength [kN]						
Substrate thickness [mm]	Steel sheet thickness [mm]					
	0,50	0,63	0,75	0,88	1,00	1,25 ÷ 2,00
3,0 ÷ 5,0	0,63/1,75	0,89/2,48	1,01/3,04	1,07/3,59	1,16/3,62	1,16/4,57

*Partial safety factor of 1.33 recommended

SELECTION TABLE				
WS (galvanized zinc coating ZN)	WS-D* (SQ Ceramic coating)	Screw dimensions	Max. usable length	Number of pieces in a box
		d_w x L_w [mm]	t_{fix} [mm]	[pcs]
WS-63019	WS-D-63019	6,3 x 19	4	250
WS-63025	WS-D-63025	6,3 x 25	10	250
WS-63032	WS-D-63032	6,3 x 32	17	250
WS-63038	WS-D-63038	6,3 x 38	23	200
WS-63100	WS-D-63100	6,3 x 100	85	100

*Screw on request and to order

Section 4. REMARKS

1. All previous versions of this Product Data Sheet shall cease to be valid
2. Data given in this Product Data Sheet is in accordance with current knowledge and published in good faith. KLIMAS Sp. z o.o. is not responsible for correctness and quality of the fixing if recommendations regarding method of use and installation are not followed.

All rights reserved The sheet may be disclosed only in the form as delivered. No part (contents such as text, graphics, logos, figures, pictures, and any other data) given in this document may be modified or published whatsoever in part, without prior authorisation. Any trademarks, graphic symbols, trade names, logos and other data are protected by copyright and are property of their owner. Created: 2016-08-19 Updated: 2022-06-24